Hy-Lite
A U.S. BLOCK WINDOWS COMPANY

Installation Instructions

Deco IM Oval

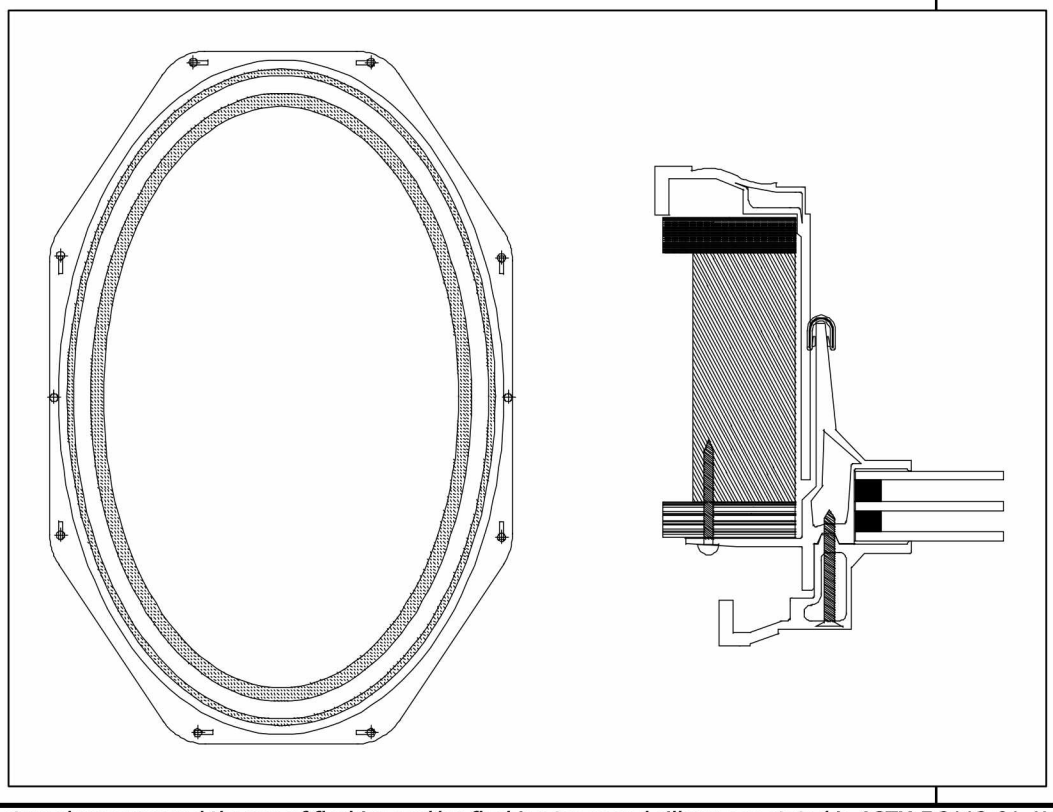

Note: We strongly recommend the use of flashing and/or flashing tapes and sill pans as stated in ASTM E 2112-01. However, due to variation in codes and building types, it is left up to the end user to determine the proper installation of these items.

LEAVE THE BUBBLE WRAP ON! Before installing your window, the bubble wrap may be peeled back for inspection, but please re-stick the wrap to protect the glass and frame from scratches and other damage until construction is complete.

Step 1	Measure to be sure the opening is 3/8" to 1/2" larger than the window size both vertically and horizontally.
Step 2	Apply a generous bead of silicone to the backside of the mounting fin. Use enough silicone to sufficiently fill all voids between the fin and the wall sheathing.
Step 3	Insert the window into the opening from the outside. The window is labeled "inside" and "outside", but if these labels have been removed, the glazing ring should always be to the outside of the building.
Step 4	Install shims under the sill, adjusting them until the unit is plumb in the opening. The window should be basically centered in the opening.
Step 5	Install a #10 x 1-1/2" screw (or sufficient length to allow 1-3/8" penetration into wall in each of the 8 slotted holes. Wall Framing should be at least #2 Spruce/Pine/Fir an fasteners should be a minimum of 1/2" from the edge of framing.
Step 6	Install 1 screw in the center of each long side. This will bring the total fasteners to ten (10). Note: Do not overtighten the screws as they will pull through the fin.
Step 7	Remove excess silicone "squeeze out" from around the fin and inspect for holes or voids. Use silicone to fill any voids.
Step 8 (Optional Trim Ring)	Apply a small amount of construction adhesive to the back of the inner trim ring and slide it into the opening until it is flat againts the interior wall board. Move to step 9 before the adhesive has time to set.
Step 9	Install the U-Channel molding to the exposed edge inside the trim ring. The trim ring will self-center during this process. Cut the U-channel to length and push the ends together. Wipe away any excess adhesive from around the trim ring.

Failure to follow these procedures will void any and all warranties.